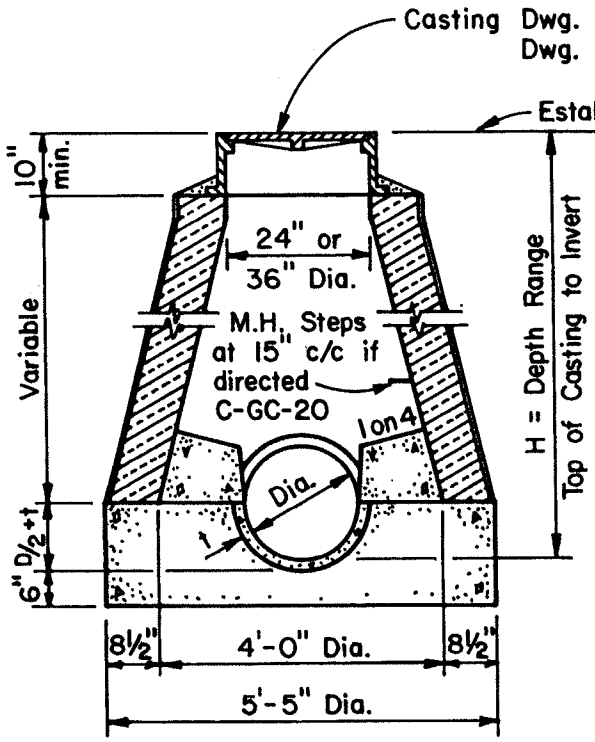

CLASS "A" & "B"

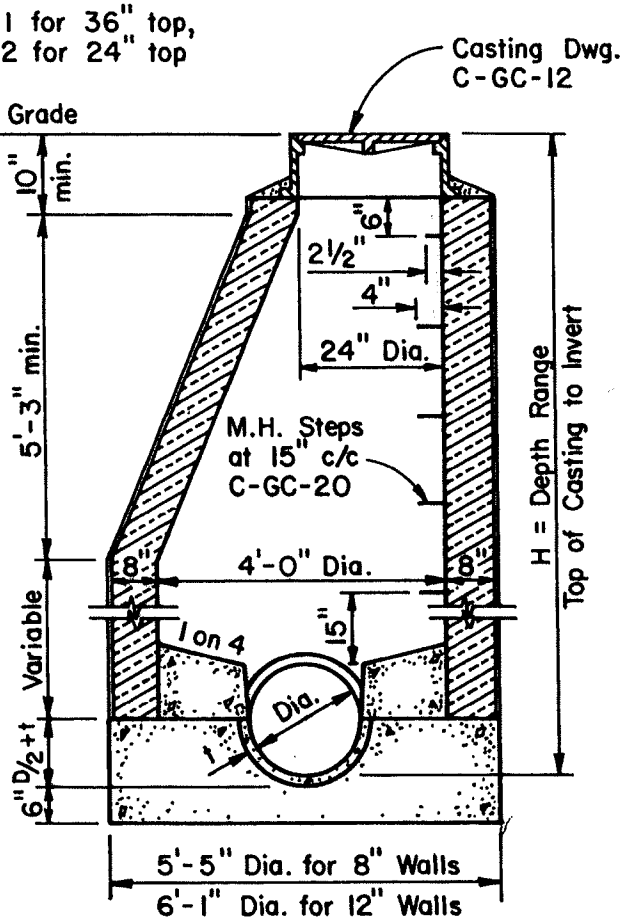

CLASS "C"

NOTES:

1. All concrete shall be Class "C".
2. Below 15' depth, walls shall be 12" thick.
3. Brick shall be clay laid in 1:2 air entrained cement mortar.
4. Outside of brickwork shall be plastered with a ½" coat of lime-cement mortar and shall be neat and even in appearance with mortar completely filling all joints.
5. Class "A" manholes shall have 36" top castings and shall be beehived.
6. Class "B" manholes shall have 24" top castings and shall be beehived.
7. Class "C" manholes shall have 24" top castings and shall have one edge vertical.
8. Clay brick shall meet ASTM C216, Grade S.W. specification.

Diameter / Class	DEPTH RANGE (H) - Top of casting to invert									
	8"	10"	12"	15"	18"	21"	24"	27"	30"	36"
"A"	2.4'-3.8'	2.5'-3.8'	2.6'-3.9'	2.8'-4.0'	2.8'-4.2'	3.0'-4.3'	3.1'-4.4'	3.3'-4.5'	3.3'-4.7'	3.6'-4.9'
"B"	3.8'-5.7'	3.8'-5.8'	3.9'-6.0'	4.0'-6.3'	4.2'-6.5'	4.3'-6.8'	4.4'-7.0'	4.5'-7.3'	4.7'-7.5'	4.9'-8.0'
"C"	5.7' & up	5.8' & up	6.0' & up	6.3' & up	6.5' & up	6.8' & up	7.0' & up	7.3' & up	7.5' & up	8.0' & up

APPROVED
EVANS, MECHWART, HAMBLETON & TILTON, INC.
By [signature]
[signature]
CITY ADMINISTRATOR

TYPE A
MANHOLE

CITY OF
GROVE CITY, OHIO

STANDARD
CONSTRUCTION DRAWING

REV.	DATE	DWG. Nº
1-7-89		C-GC-1