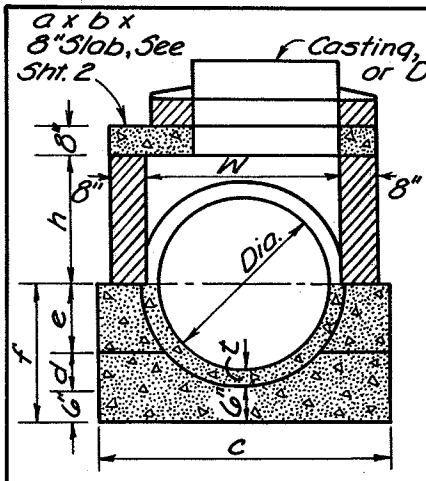

CLASS D & E
(without corbel above slab)

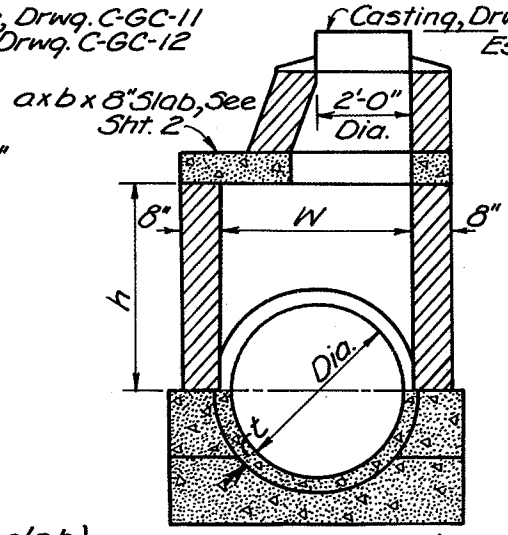

CLASS F, G, H & J
(with corbel above slab)

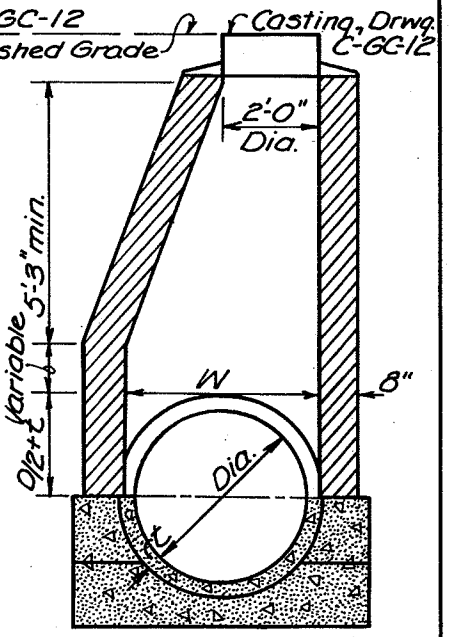

CLASS K
(without slab)

-NOTES-

1. Inside length for all manholes shall be 4'-0".
2. Use 4' length of half pipe thru manhole placed as directed to elevations required.
3. Corbel brick wall not more than 1" per course.
4. Below 15' depth, walls shall be 12" thick.
5. M.H. Steps, Drwg. C-GC-19 shall be spaced at 15" but are not shown.
6. Brick shall be laid in 1:2 mortar.
7. Plain Class C conc. may be substituted for brickwork below slab.

NOTE: The letter D indicates 36" top casting, the remaining letters indicate 24" top casting. Number indicates Dia. of slab openings in ins.

Dia. / Class	DEPTH RANGE (Top of casting to invert)					
	30"	36"	42"	48"	54"	60"
D 36	5.0' to 7.5'	5.5' to 7.5'	6.0' to 7.5'	6.5' to 7.5'		
E 24	7.5' to 8.8'	7.5' to 8.8'	7.5' to 8.8'	7.5' to 8.8'	7.5' to 8.8'	7.5' to 8.8'
F 30		8.8' to 10.8'	8.8' to 10.8'	8.8' to 10.8'	8.8' to 10.8'	8.8' to 10.8'
G 36				10.2' to 12.1'	10.2' to 12.1'	10.2' to 12.1'
H 42					11.4' to 13.4'	11.4' to 13.4'
J 48					12.8' & up	12.8' & up
K 48	8.8' & up	9.4' & up	10.0' & up	10.5' & up		

COMMON DIMENSIONS FOR ALL CLASSES									DIMENSION h FOR SLAB MANHOLES					
Dia.	t	a	b	c	d	e	f	w	D	E	F	G	H	J
30"	3½"	5'-4"	5'-4"	6'	5½"	13"	2'-0½"	4'	2'-3"	4'-9"				
36"	4"	5'-4"	5'-4"	6'	6½"	15½"	2'-4"	4'	2'-6"	4'-6"	4'-6"			
42"	4½"	5'-4"	5'-4"	6'	7½"	18"	2'-7½"	4'	2'-9"	4'-3"	4'-3"			
48"	5"	5'-4"	5'-4"	6'	8½"	20½"	2'-11"	4'	3'-0"	4'-0"	4'-0"	4'-0"		
54"	5½"	5'-10"	5'-4"	6½'	9½"	23"	3'-2½"	4½'		3'-3"	3'-9"	3'-9"	3'-9"	3'-9"
60"	6"	6'-4"	5'-4"	7'	10½"	2'-1½"	3'-6"	5'		3'-6"	3'-6"	3'-6"	3'-6"	3'-6"

1/2

Approved 3 Dec 72
Date

City Engineer

TYPE B MANHOLES

City of Grove City
Ohio

Standard
Construction Drawing

Rev.

C-GC-2

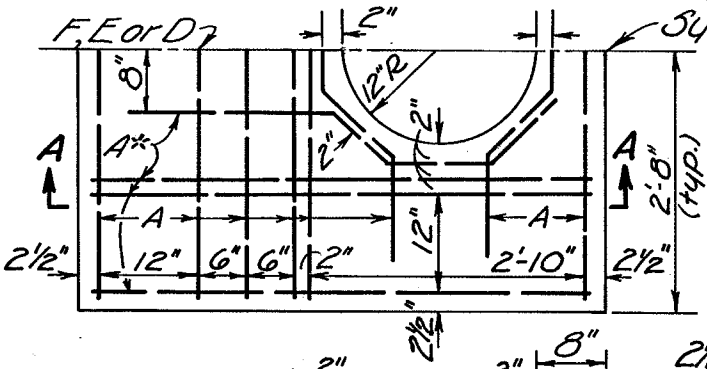

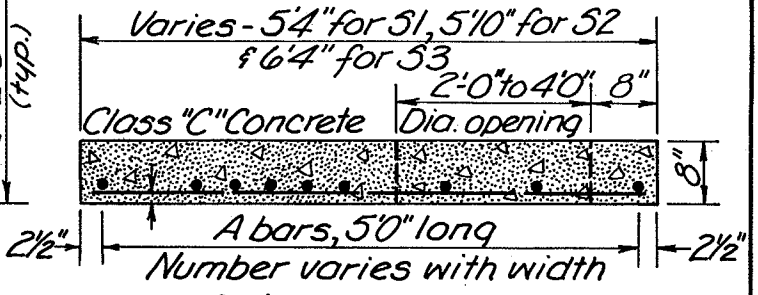

SECTION A-A

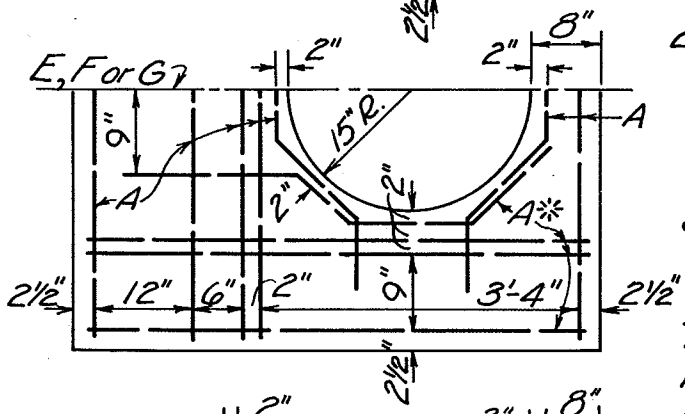

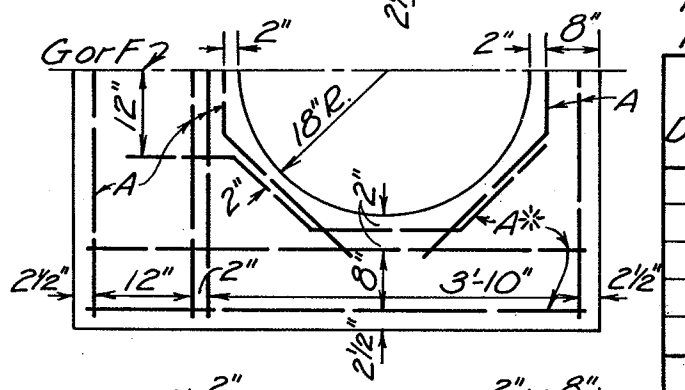

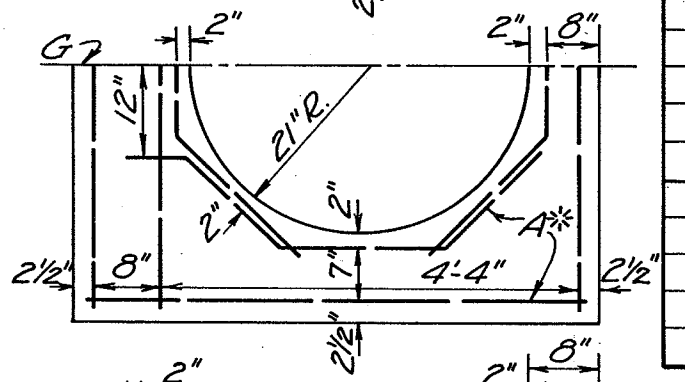

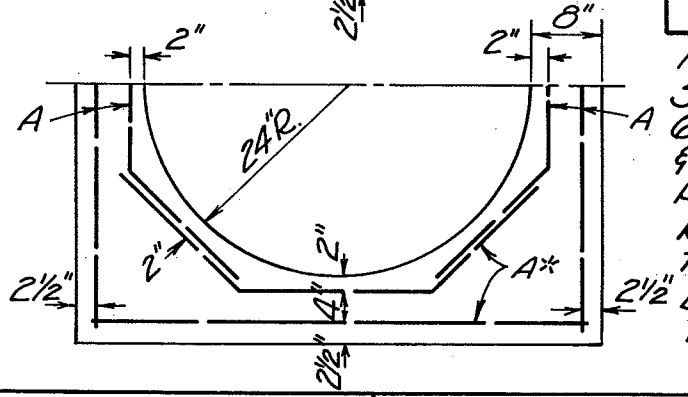

Slab designations S1-24 to S1-48 are 5'-4" x 5'-4" x 8"
" " S2-24 to S2-48 are 5'-10" x 5'-4" x 8"
" " S3-24 to S3-48 are 6'-4" x 5'-4" x 8"

The latter number in the slab designation indicates the diameter of opening in inches.

Slab Designation	Number of ½"ϕ Reinforcing Bars						
	A 5'-0"	B 5'-6"	C 6'-0"	D 3'-4"	E 2'-10"	F 2'-4"	G 1'-10"
S1-24	16					1	
S1-30	15						1
S1-36	12						
S1-42	9						
S1-48	8						
S2-24	9	8			1		
S2-30	8	8				1	
S2-36	7	6					1
S2-42	6	4					
S2-48	5	4					
S3-24	10		8	1			
S3-30	9		8		1		
S3-36	8		6			1	
S3-42	7		4				1
S3-48	6		4				

Half plans shown for S1 slabs (5'-4" x 5'-4") S2 slabs (5'10" x 5'4") and S3 slabs 6'-4" x 5'-4") are similar, bar designations & number of bars are shown in accompanying schedule.

Reinforcing bars adjacent to opening are to be bent as indicated in plan.

Bars marked A* in slab S1 change to B bars in slab S2 and to C bars in slab S3.

2/2

Approved 23 Dec 72
Date

City Engineer

TYPE B MANHOLES

City of Grove City
Ohio

Standard Construction Drawing

Rev.

C-GC-2