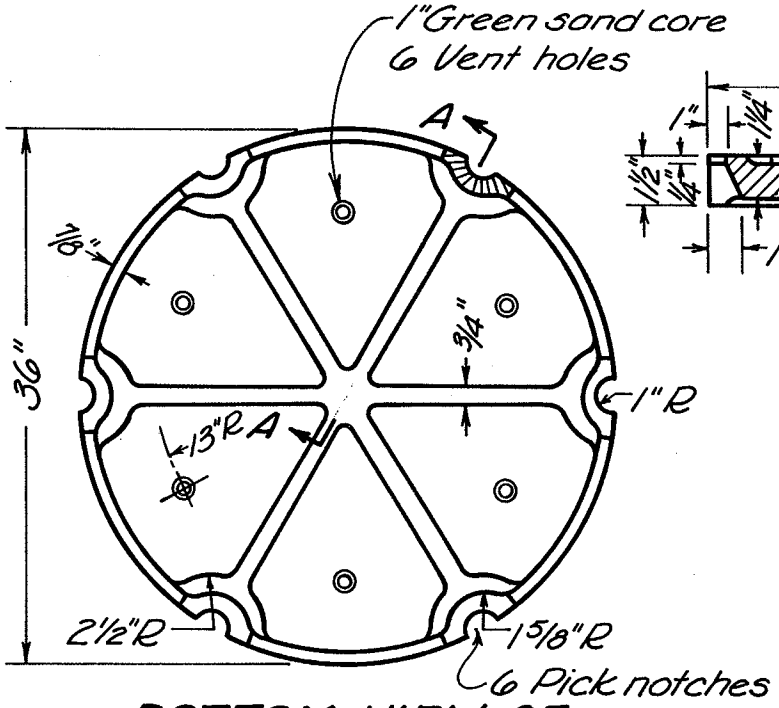

BOTTOM VIEW OF COVER

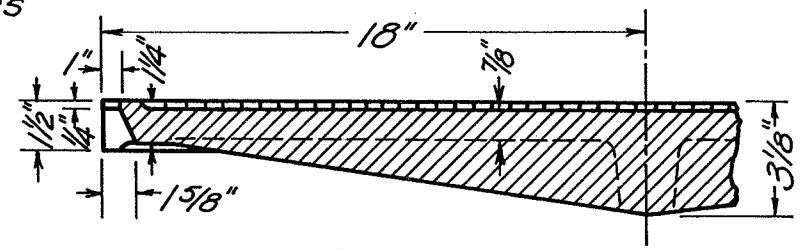

SECTION A-A

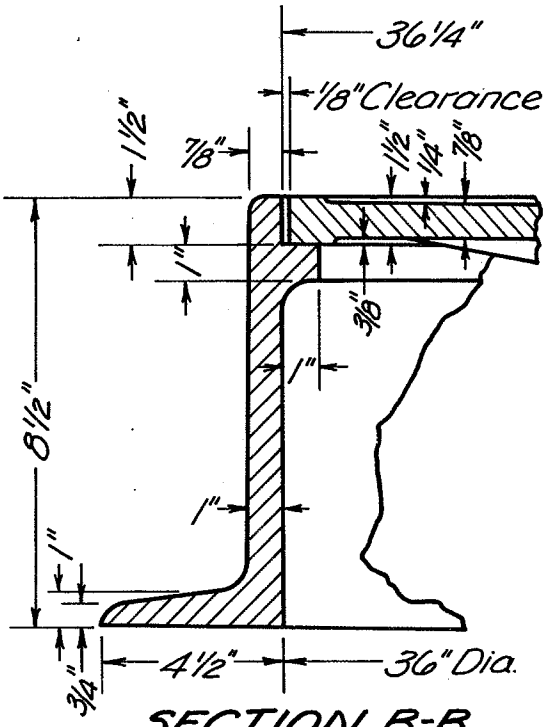

SECTION B-B

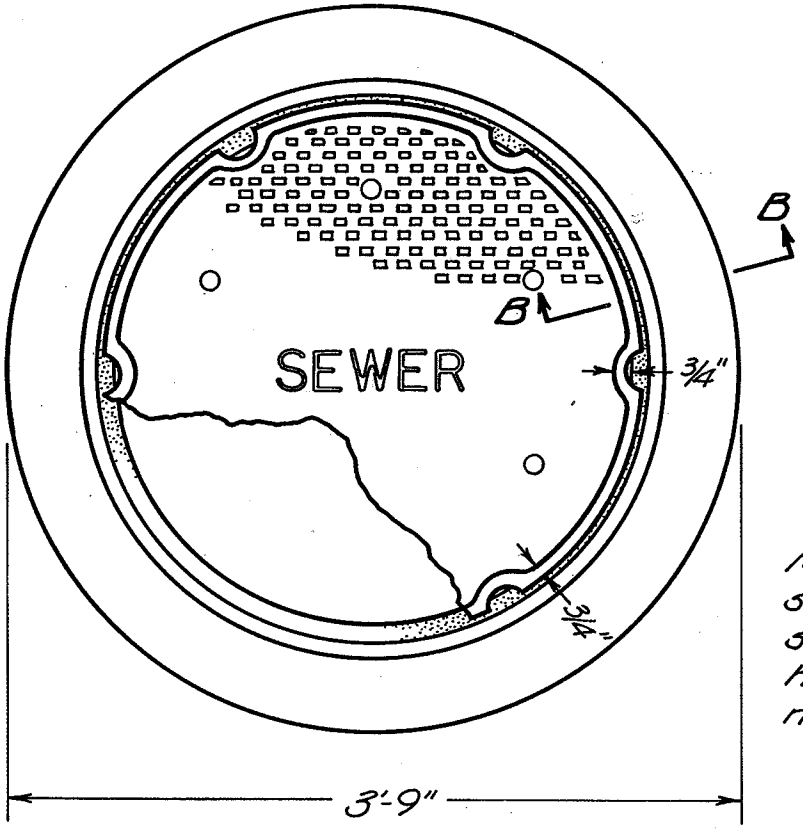

TOP VIEW OF ASSEMBLY

NOTES

Material shall be first quality soft gray cast iron. The top surface of the cover shall have on approved type of non-skid tread.

Cover weight (Approx.) = 315 lbs.
Frame weight (Approx.) = 485 lbs.

Approved 23 Dec 77 Date City Engineer	**36" MANHOLE FRAME & COVER CASTINGS**	City of Grove City Ohio Standard Construction Drawing Rev. C-GC-11