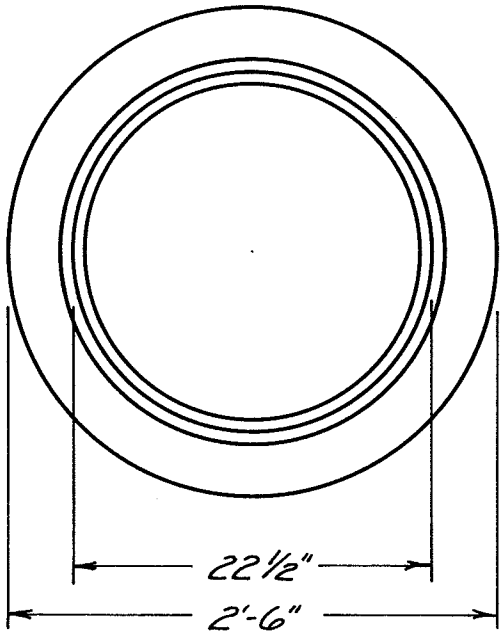

PLAN

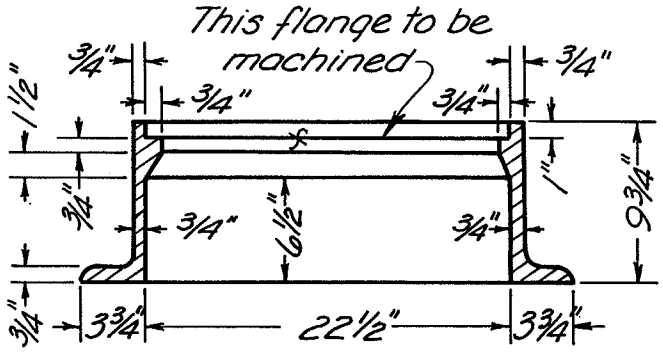

SECTION GROUND RIM

Foundry name shall be cast on the underneath or unexposed surface of both lid and ground rim.

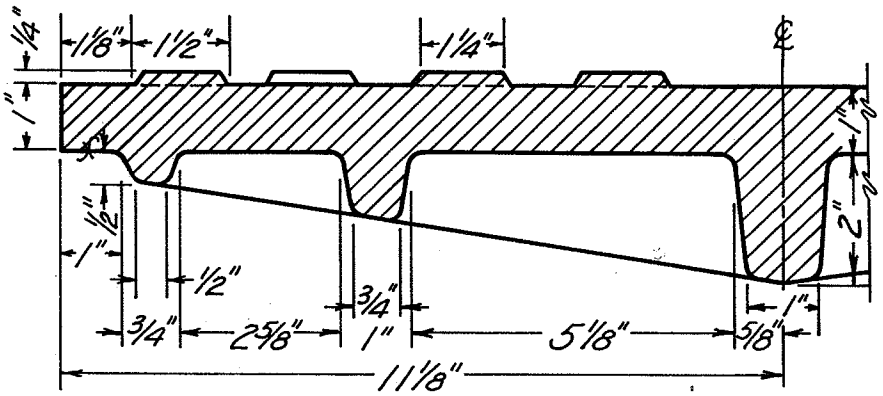

SECTION A-A

BOTTOM

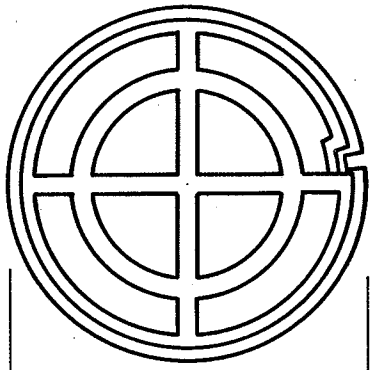

22¼" Dia.

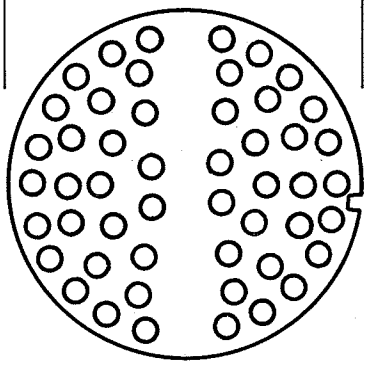

TOP

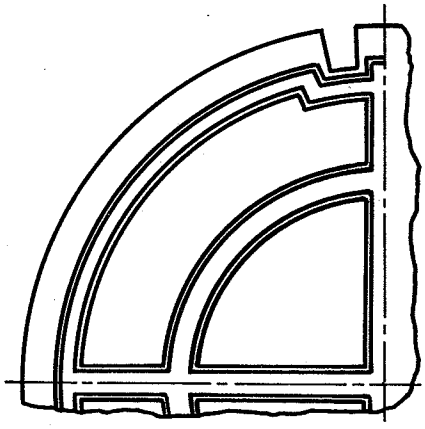

BOTTOM

¼ LID

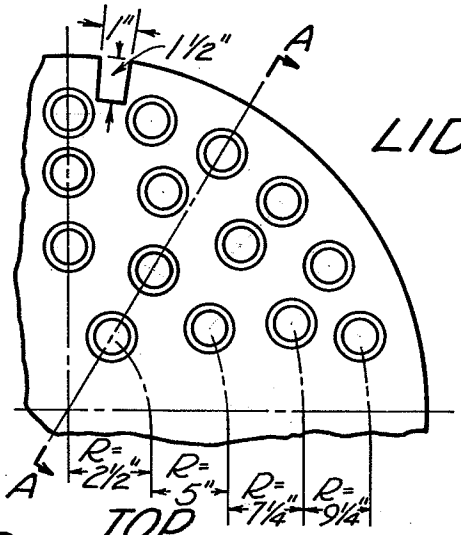

LID

TOP

Approved 23 Dec 92 Date City Engineer	24" MANHOLE FRAME & COVER CASTINGS FOR STORM SEWERS	City of Grove City Ohio Standard Construction Drawing Rev. 10/13/80 C-GC-12