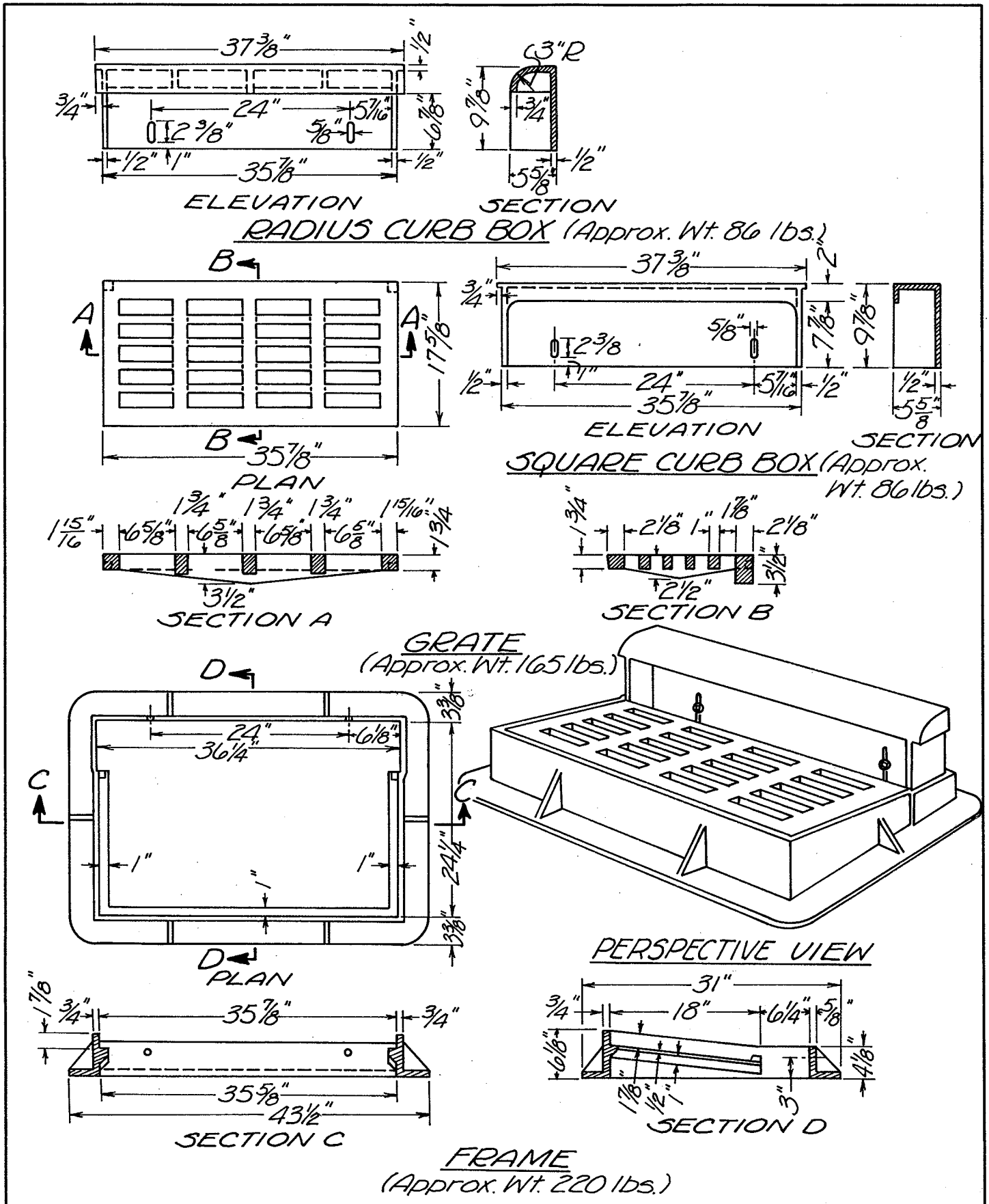

Approved 23 Oct 72
Date

City Engineer

CAST IRON FRAME FOR CURB & GUTTER INLET

City of Grove City Ohio

Standard Construction Drawing

Rev.

C-GC-13