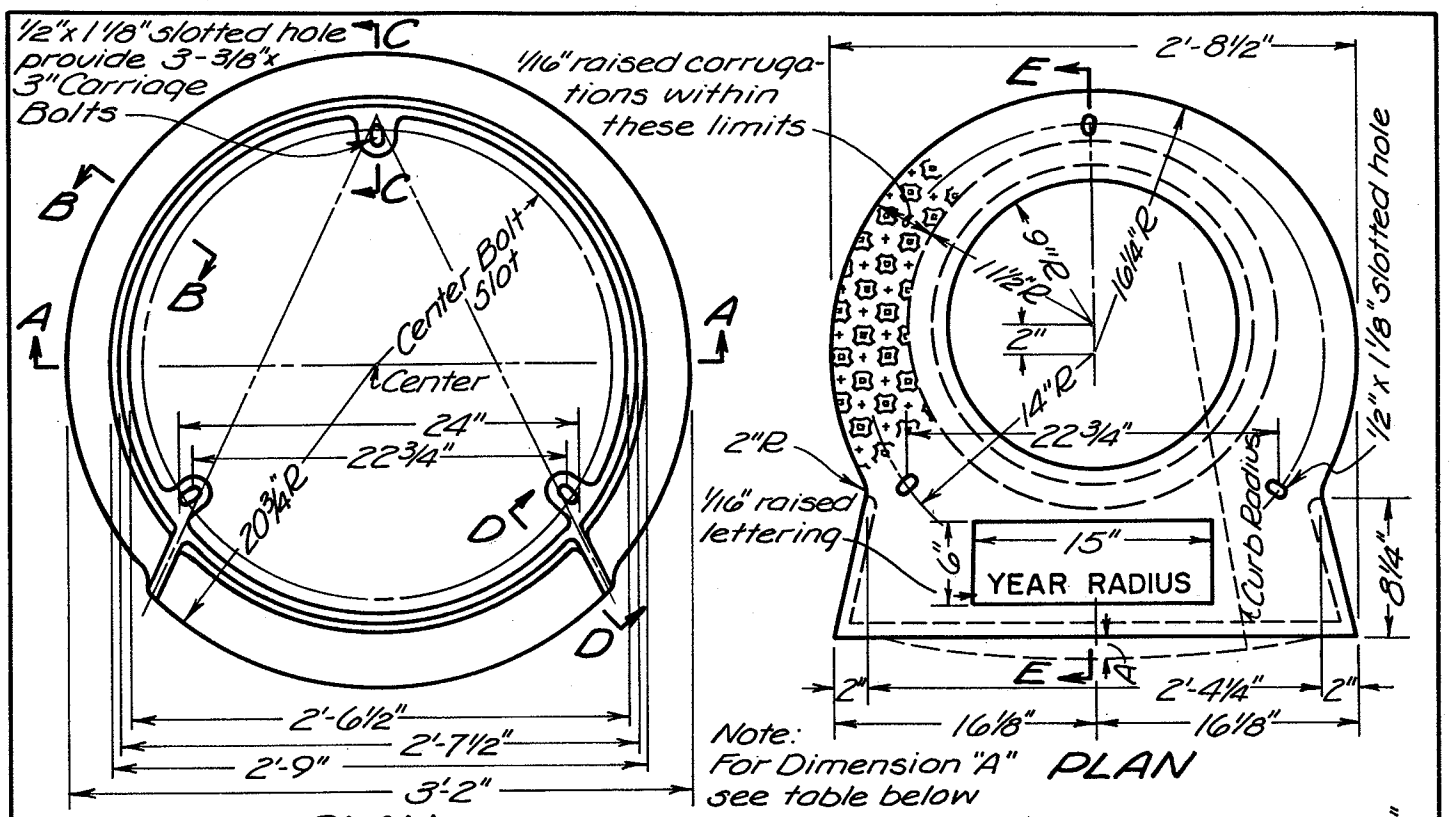

Note: For Dimension "A" see table below

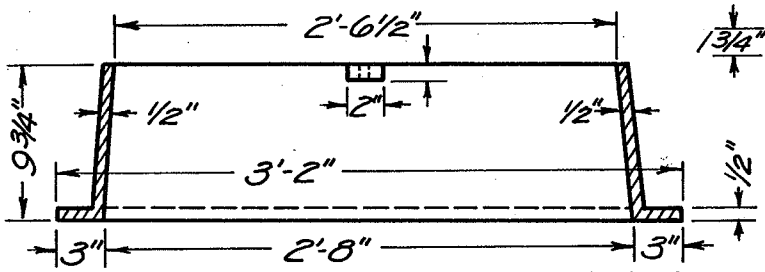

GROUND RIM - SECTION A-A

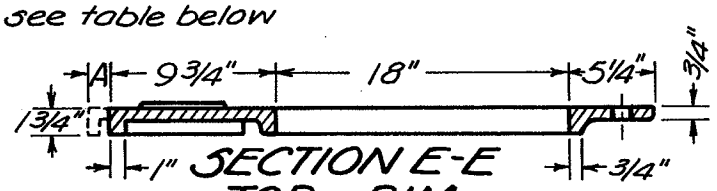

SECTION E-E
TOP RIM

Foundry name shall be cast on the underneath or unexposed surface of all castings.

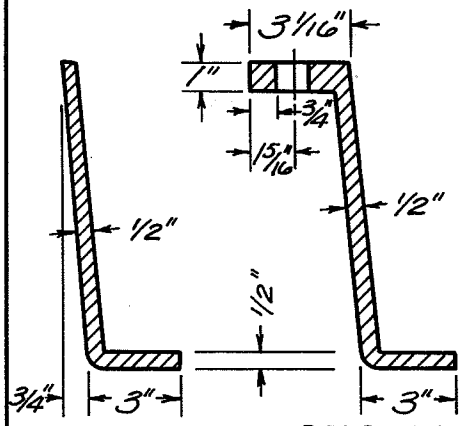

B-B

SECTIONS C-C

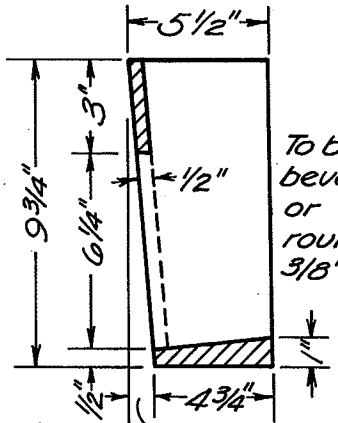

D-D

To be beveled or rounded 3/8"R

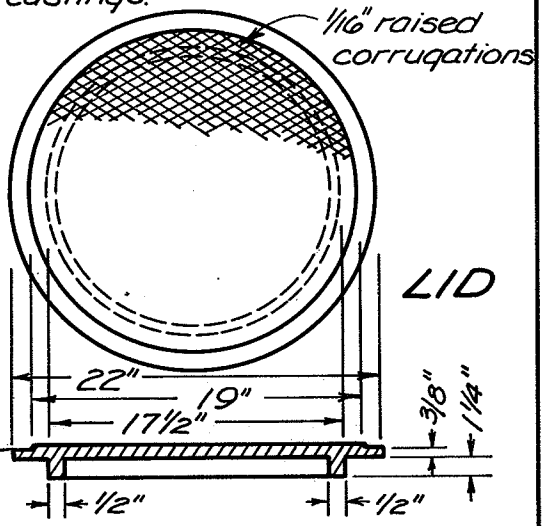

TABLE	
CURB	"A"
STRAIGHT	0.00"
20 ft. rad.	0.54"
15 " "	0.72"
12 " "	0.91"

Approved 23 Dec 72
Date

City Engineer

CASTINGS FOR RADIUS CURB INLET

City of Grove City Ohio

Standard Construction Drawing

Rev.

C-GC-14