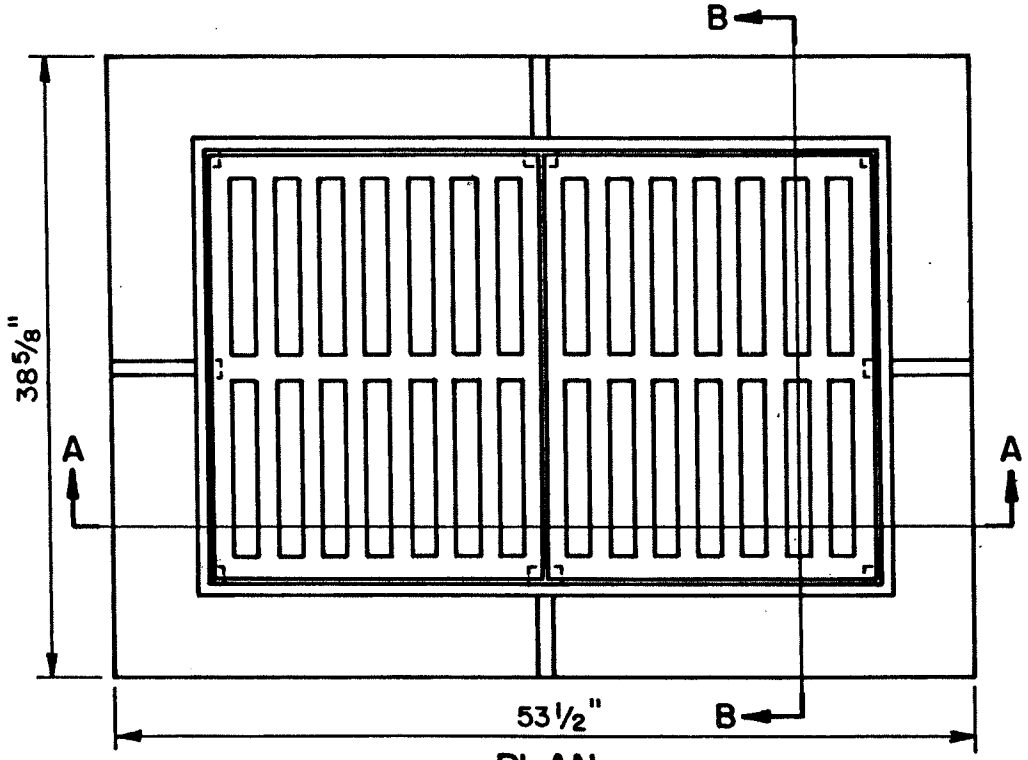

PLAN

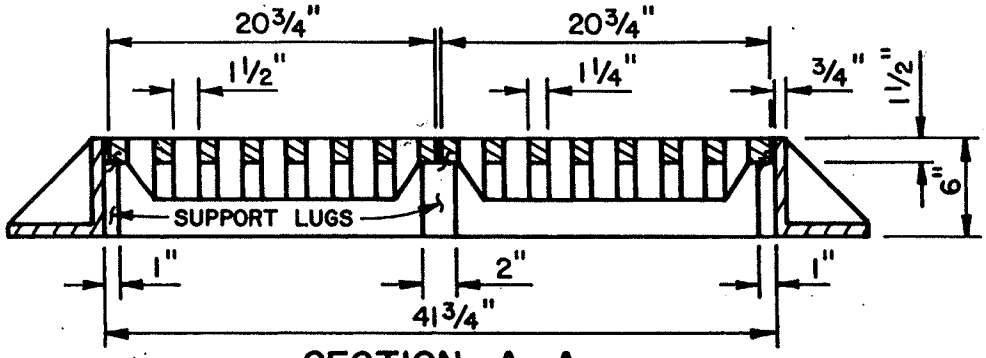

SECTION A-A

NOTE: CASTING TO BE NEENAH R-3396 OR APPROVED EQUAL.

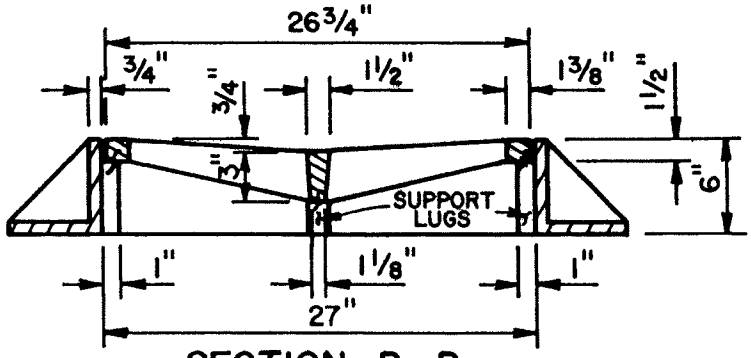

SECTION B-B

NOTE: APPROXIMATE TOTAL WEIGHT IS 800 LBS.

APPROVED
EVANS, MECHWART, HAMBLETON & TILTON, INC.

By

CITY ADMINISTRATOR

FRAME & GRATES FOR INVERTED CROWN INLET

CITY OF GROVE CITY, OHIO

STANDARD CONSTRUCTION DRAWING

REV.	DATE	DWG. Nº
3-28-89		C-GC-15