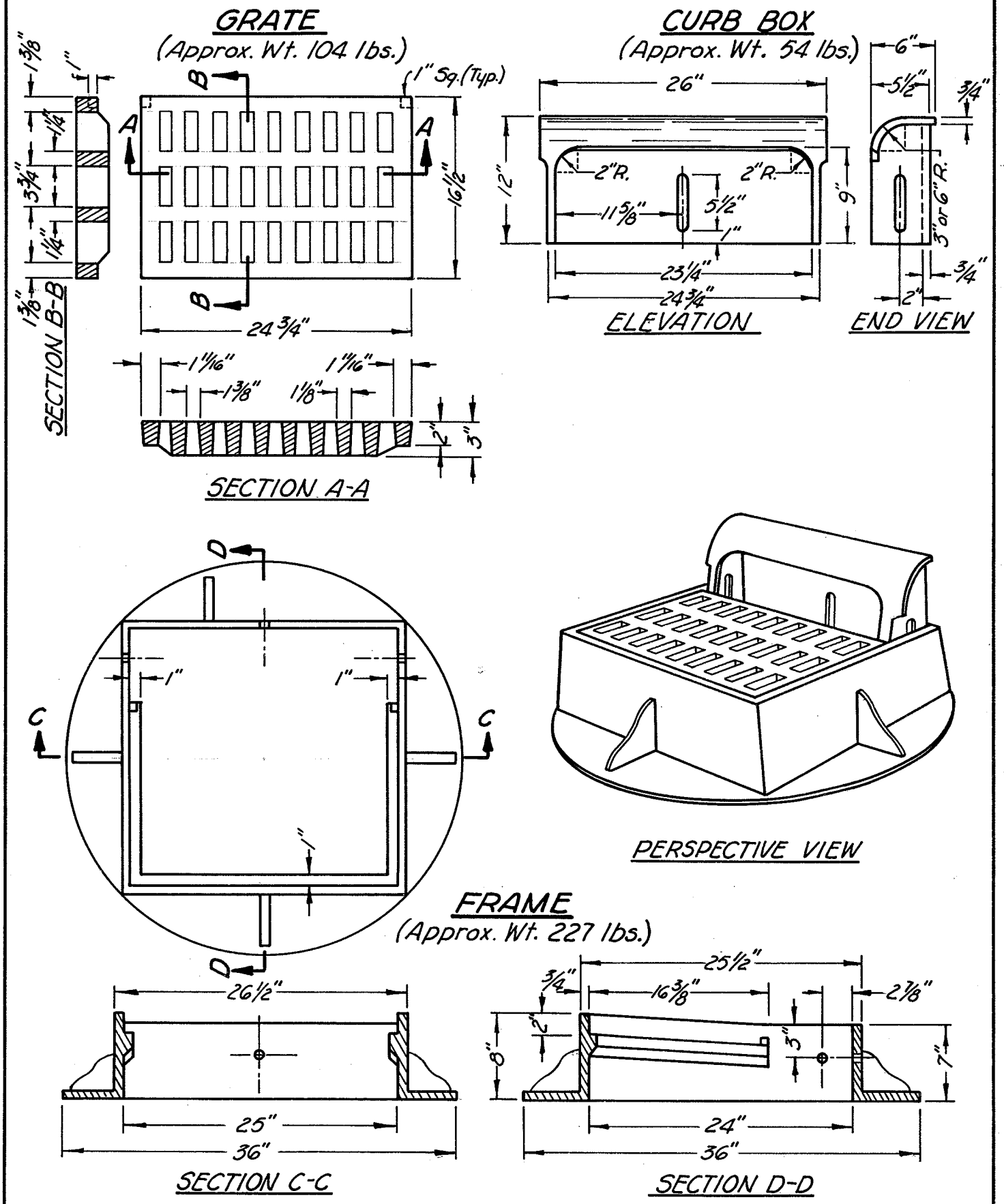

Approved 22 Aug 75
Date

City Engineer

CAST IRON FRAME FOR RADIUS GUTTER INLET

City of Grove City
Ohio

Standard
Construction Drawing

Rev.

C-GC-16