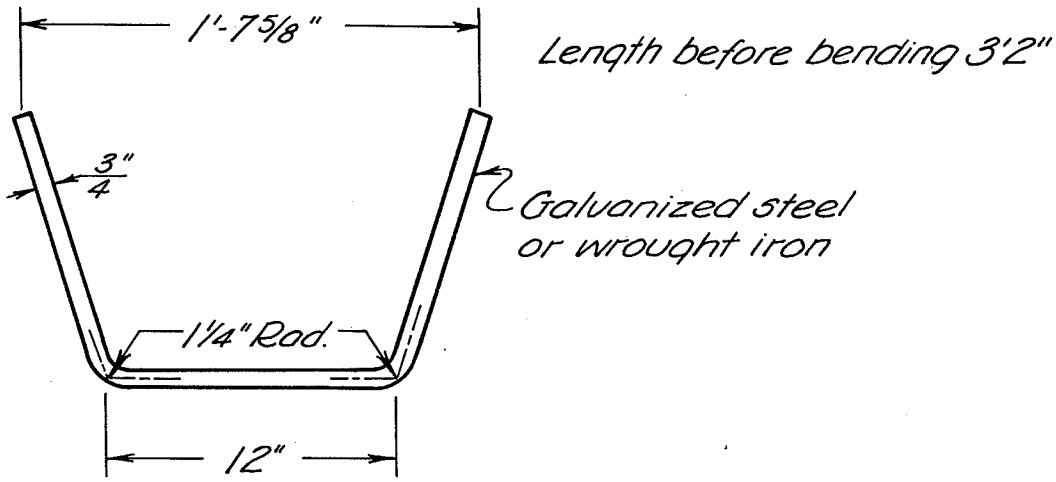

Standard Manhole Step

Manhole Steps may not be required when height of structure is 60" or less

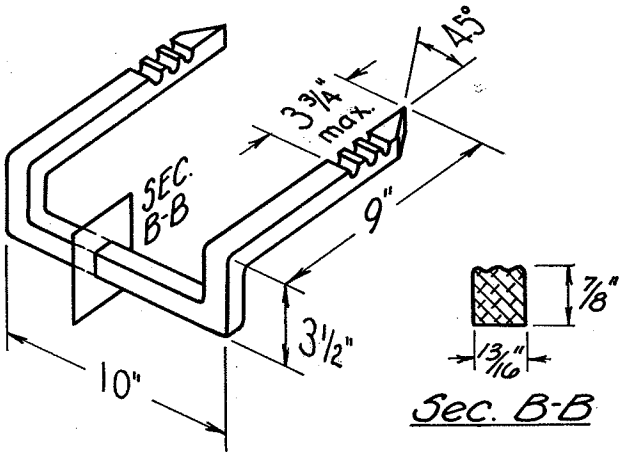

Sec. B-B

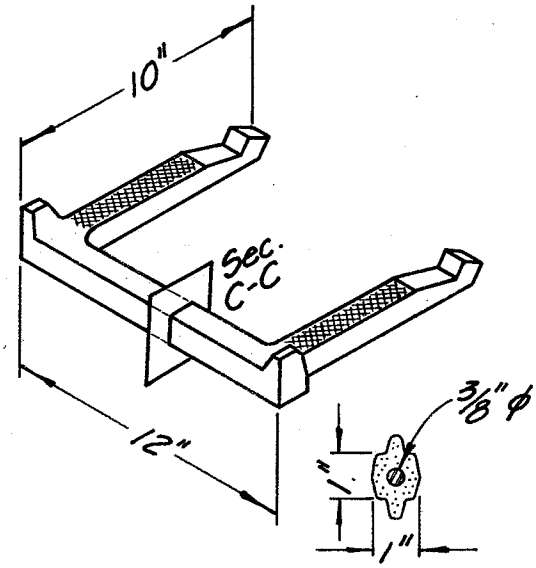

Sec. C-C

Steps shall be forged aluminum alloy carefully driven into the barrel by pressure or vibration before initial set occurs, or cast in place

Aluminum Step

Polypropylene Step

PRECAST MANHOLE STEPS

Approved 23 Dec 72 Date City Engineer	MANHOLE STEPS	City of Grove City Ohio Standard Construction Drawing Rev. 2/26/79 C-GC-20