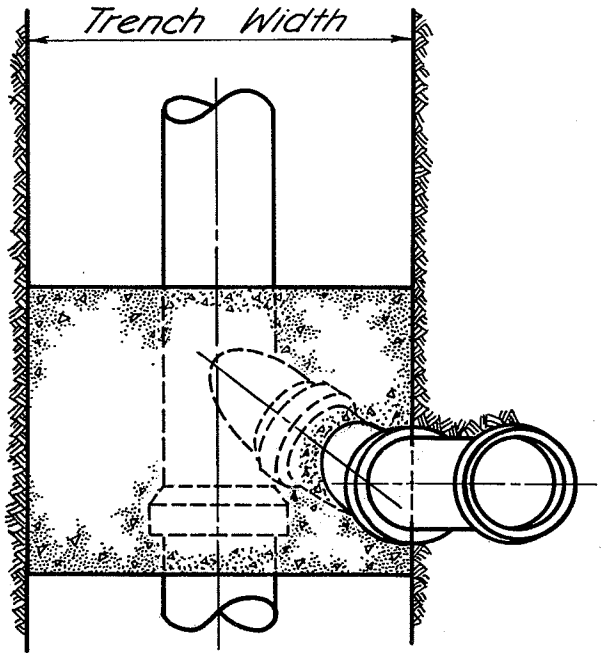

PLAN

Note: For Wye Branch Installation See C-GC-37

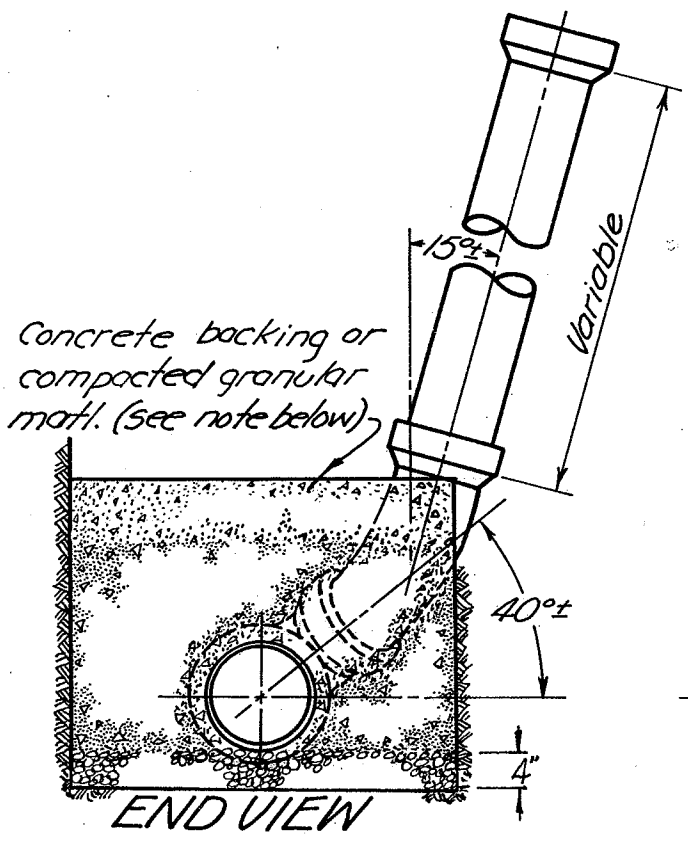

END VIEW

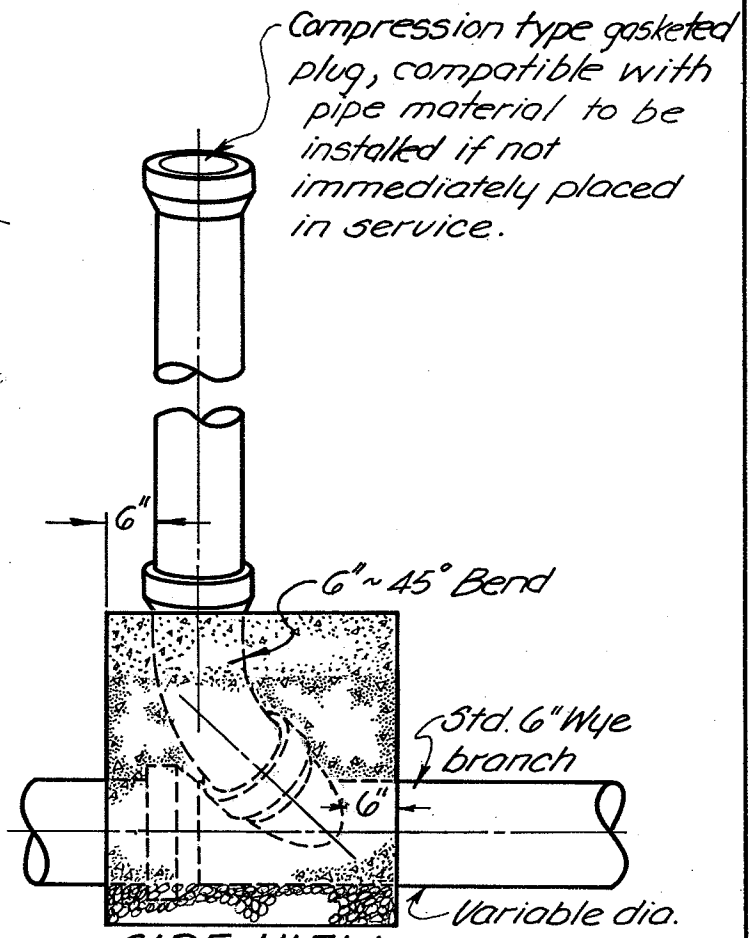

SIDE VIEW

CONCRETE BACKING SHALL BE USED ONLY WITH EXTRA STRENGTH VITRIFIED CLAY PIPE, NON-REINFORCED CONCRETE, OR REINFORCED CONCRETE PIPE. COMPACTED GRANULAR MATERIAL SHALL BE USED ON ALL OTHER PIPE MATERIAL. AGGREGATE SHALL BE MATERIAL SUITABLE FOR TYPE I BEDDING.

Approved 30 Oct 82 Date City Engineer	TYPICAL RISER DETAIL	City of Grove City Ohio Standard Construction Drawing Rev. 10/9/80 C-GC-22