Note: Use only with extra strength Vitrified Clay pipe, Nonreinforced Concrete, or Reinforced Concrete pipe. For other materials, use fittings and adapters compatible with the pipe material, and in accordance with the manufacturer's recommendations.

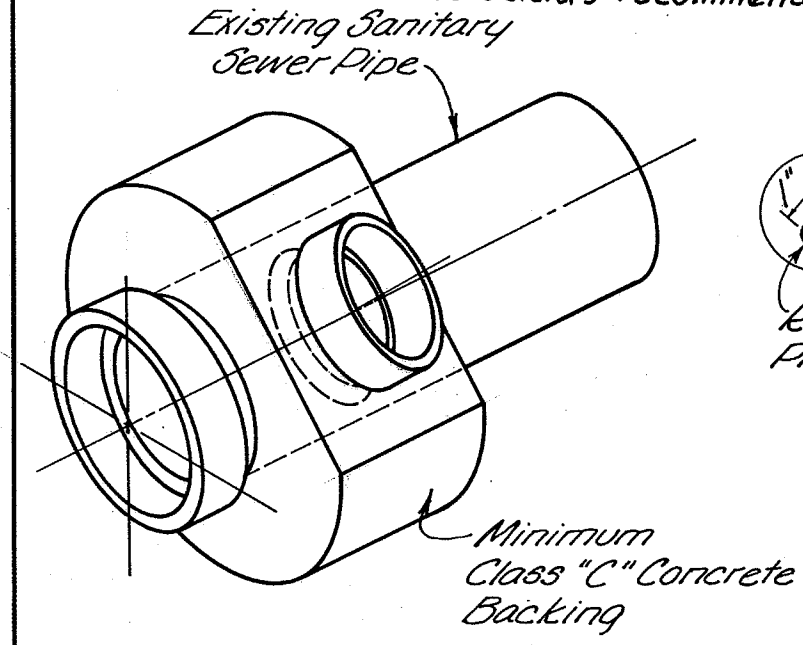

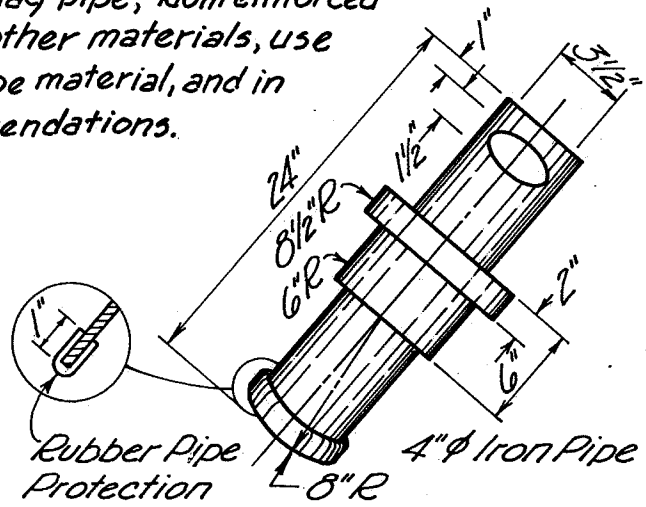

TEE TAP SUPPORT

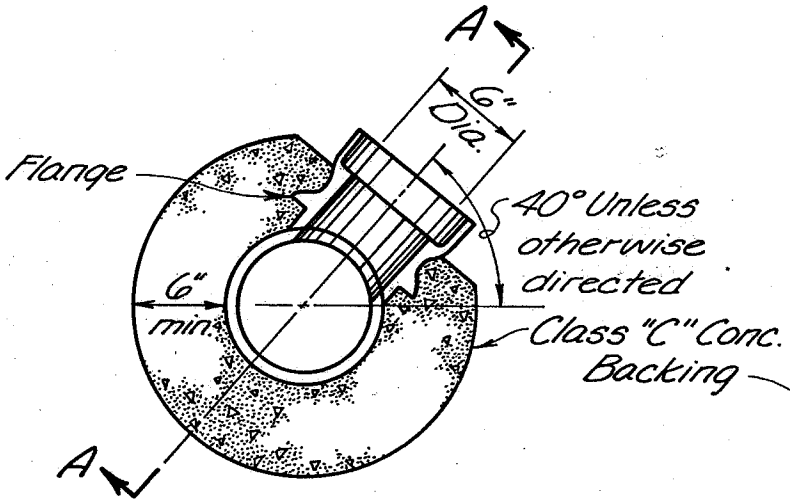

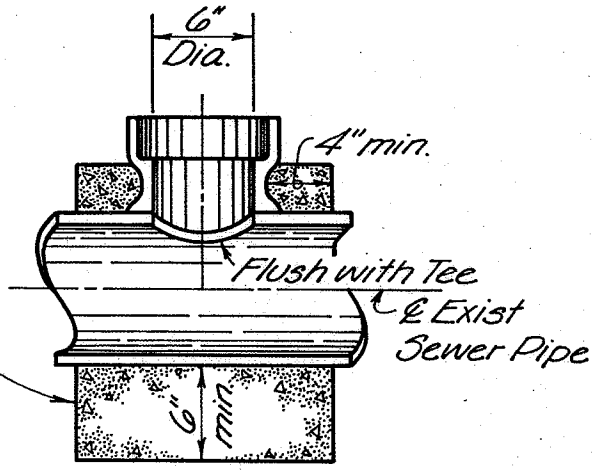

SECTION A-A

Notes:

A 6-inch hole shall be sawed in the sewer with a circular saw.

Punching or chipping the hole into the pipe will not be permitted.

Only tee tap connections with flange will be approved.

If connection to the house is not made immediately, a stopper shall be provided.

Approved 7 May 73 Date Edward A. Bosch City Engineer	SERVICE CONNECTION FOR EXIST. SANITARY SEWER PIPE	City of Grove City Ohio Standard Construction Drawing Rev. C-GC-30