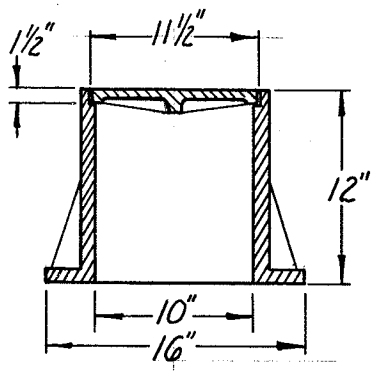

SECTION VIEW

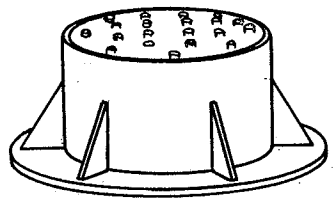

ISOMETRIC VIEW
(Approx. Wt. 110 lbs.)

NOTE: Cleanout top of casting shall be set flush with finished grade.

CLEANOUT FRAME & LID

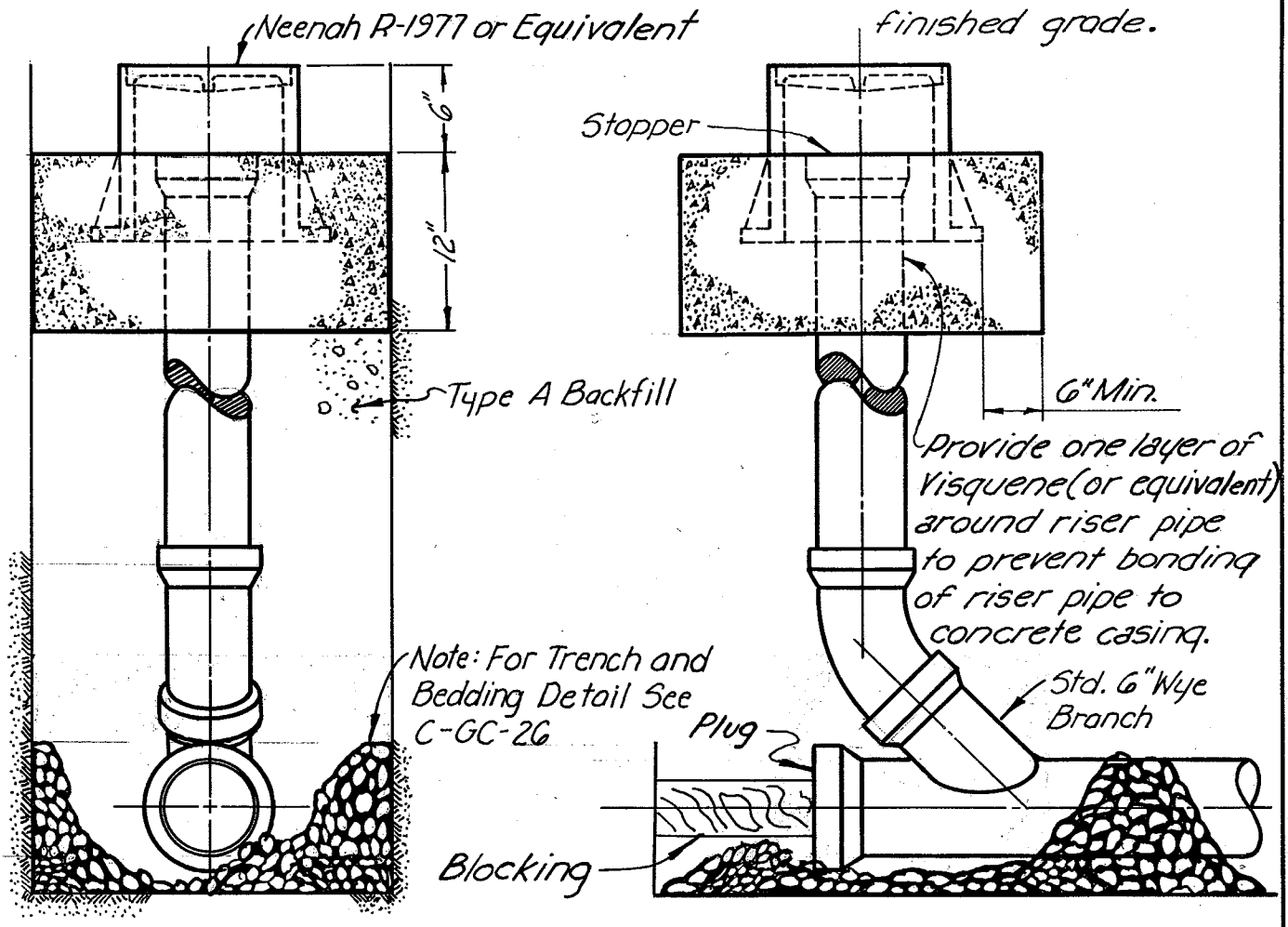

END ELEVATION

SIDE ELEVATION

CLEANOUT

Approved 8 Jan 76 Date Edward A Bischoff	TYPICAL CLEANOUT DETAIL	City of Grove City Ohio Standard Construction Drawing Rev. 7/18/79 C-GC-38