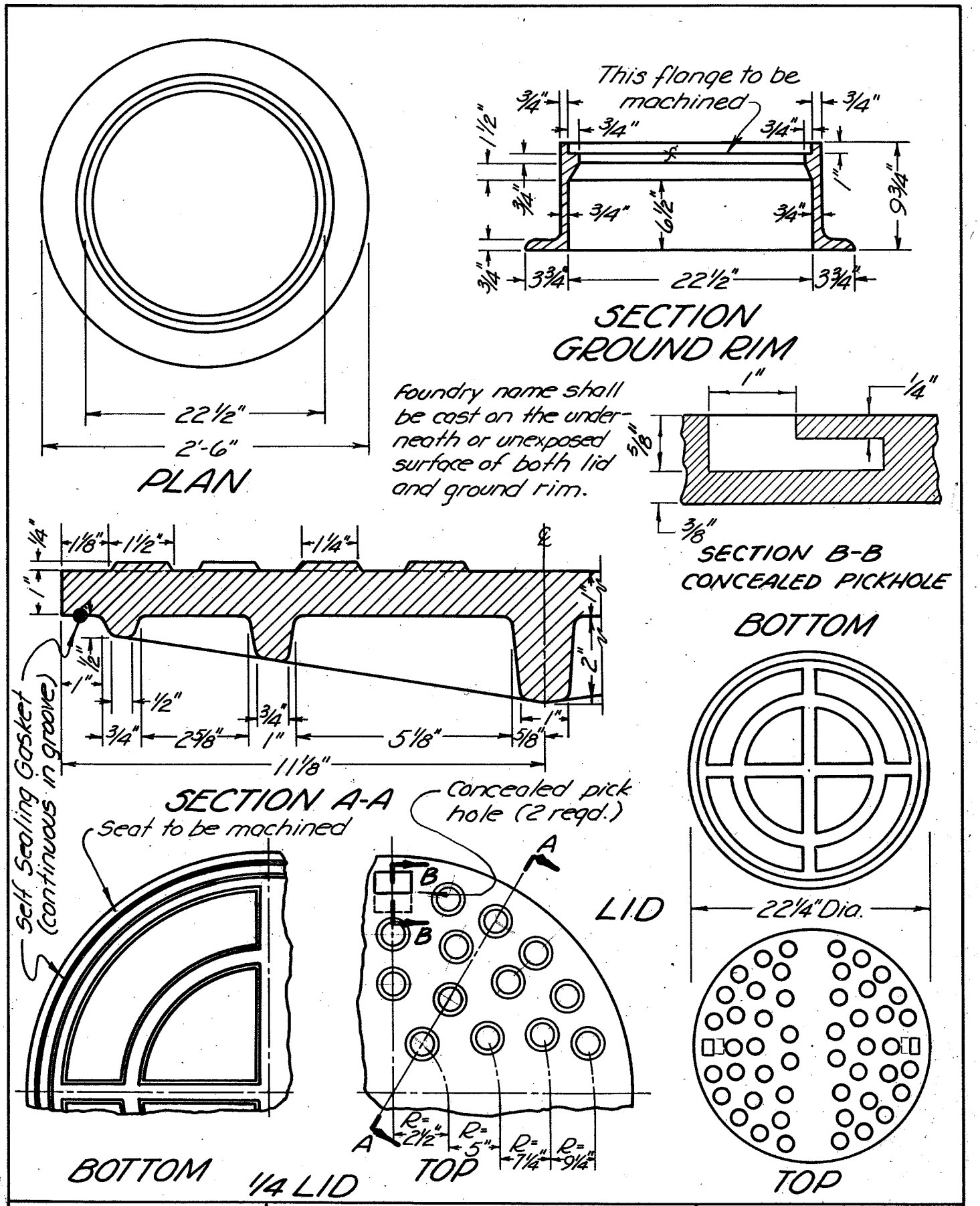

Approved 27 Dec. 79
Date

Edward A. Bierhoff
City Engineer

24" MANHOLE FRAME & COVER CASTINGS FOR SANITARY SEWERS

City of Grove City Ohio

Standard Construction Drawing

Rev.

C-GC-44